MINIMUM TRENCH WIDTHS IN EARTH & MAXIMUM PAY WIDTHS FOR ROCK EXCAVATION					
SIZE	WIDTH	SIZE	WIDTH	SIZE	WIDTH
UP TO 4" PIPE	1'-6"	12" PIPE	2'-6"	18" PIPE	3'-0"
6"	2'-0"	14"	2'-6"	20"	3'-2"
8"	2'-0"	15"	2'-8"	21"	3'-4"
10"	2'-4"	16"	2'-8"	24"	3'-8"

NOTE: NO ROCKS LARGER THAN 1 1/2" SHALL BE ALLOWED IN TOP 6". TOP OF BACKFILL WILL BE UNIFORMILY ROUNDED ABOVE EXISTING GROUND FOR SETTLING.

NOTE: BACKFILL SHALL BE HAND PLACED BUT MAY BE MECHANICALLY PLACED IF APPROVED BY ENGINEER & SOLIDLY TAMPED BY HAND OR APPROVED MECHANICAL METHODS (MAY BE "WALKED-IN" WITH PVC PIPE) AROUND THE PIPE & TO A POINT 8" HIGHER THAN TOP OF THE PIPE & 12" HIGHER FOR A.C. PIPE. THE REMAINDER OF BACKFIL SHALL CONTAIN NO ROCKS LARGER THAN 18".

NOTE: NO ROCK LARGER THAN 1/2" ALLOWED

STANDARD BEDDING (SEE STANDARD BEDDING TABLE) FOR PVC PIPE MAY BE COMPACTED IN PLACE BY "WALKING-IN" FINELY GRADED SELECT MATERIAL. WHERE TRENCHING EQUIPMENT LEAVES SUITABLE BEDDING, SHOVELING OF ADDITIONAL BEDDING SHALL NOT BE REQUIRED. THE PIPE BARREL SHALL BE UNIFORMLY SUPPORTED FOR ITS FULL LENGHT.

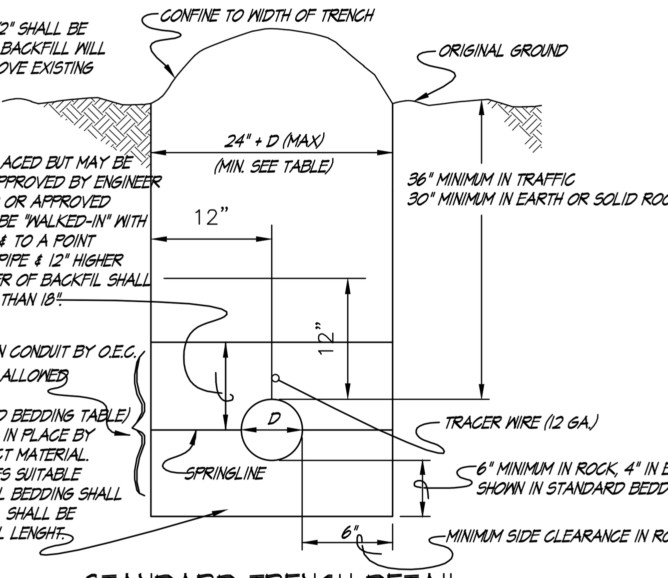

STANDARD TRENCH DETAIL

N.T.S. (WD1-05)

SURFACE RESTORATION

(WD1-10)

NOTE: WHERE SEPARATE BID ITEMS ARE ESTABLISHED FOR PAVING REPLACEMENT, QUANTITIES SHALL BE DETERMINED AS FOLLOWS: STONE USED FOR PAVEMENT REPLACEMENT TO BE PAID FOR BY TON FOR WEIGHT OF MATERIAL REQUIRED TO FIT THE DIMENSIONS SHOWN IN THESE DETAILS. UNIT WEIGHT = 110#/SQ.YD. PER INCH OF DEPTH.

BITUMINOUS SURFACING OF ALL TYPES PAID FOR ON THE BASIS OF SQUARE YARDAGE OF 2" THICK PAVING REQUIRED TO FIT DIMENSIONS SHOWN IN THE DETAILS. ADJUST THE ACTUAL DEPTH REQUIRED TO MATCH EXISTING PAVING. CONCRETE SURFACING, EXCEPT DRIVEWAYS & SIDEWALKS, PAID FOR ON BASIS OF SQUARE YARDAGE OF 6" THICK PAVING REQUIRED TO FIT DIMENSIONS SHOWN IN DETAILS. ADJUST TO ACTUAL DEPTH REQUIRED.

*NOTE: ALL INSTALLATION IN ROCK WILL UTILIZE THE UNDERCUTTING METHOD W/6" CRUCHED STONE BEDDING (SAND FOR A.C.) PVC, COPPER, OR GALVANIZED MAY BE BEDDED IN ROCK ON 6" EARTH IF PIPE IS 4" DIA. OR LESS.

NOTE: UNDERCUTTING METHOD REQUIRED FOR ALL PVC, CAST IRON, & DUCTILE IRON PIPE 4" & ABOVE. OPTIOAL ON ALL OTHER SIZES. - A.C. PIPE OF ALL SIZES SHALL USE UNDERCUTTING METHODS., SEE SPECIFICATIONS. (SEE NOTE ELSEWHERE ON THIS SHEET FOR EXCEPTIONS FOR PVC PIPE.)

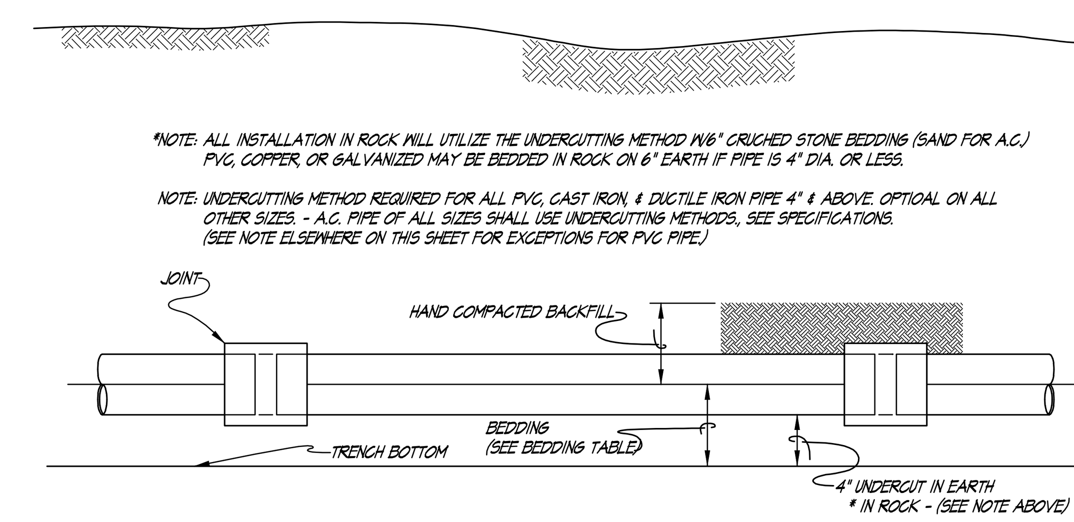

UNDERCUTTING METHOD

N.T.S. (WD1-08)

NOTE: MAY BE USED ON ALL PVC PIPELINES 4" AND SMALLER AND ALL GALVANIZED OR COPPER LINES. THE BOTTOM MUST BE LEVELED AND FREE OF IRREGULARITIES.

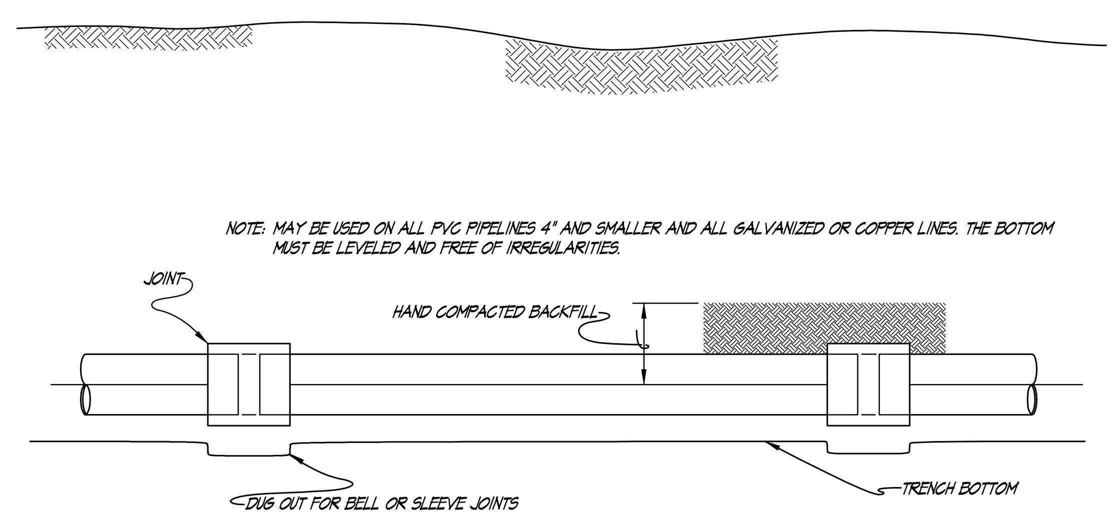

SOLID TRENCH BOTTOM METHOD

N.T.S. (WD1-09)

NOTE: AC PIPE CROSSINGS SUBSTITUTE BANK RUN SAND, IF NOT ENCASED, FOR SPEC. #78 STONE. ALL OTHER PIPE MATERIALS USE STONE.

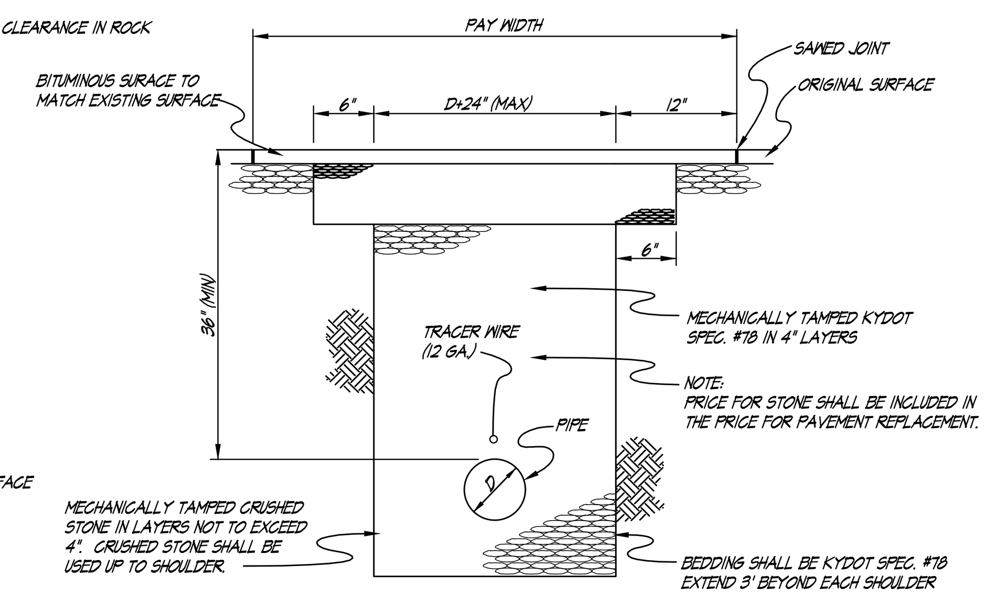

BITUMINOUS LIGHT-DUTY SURFACE 2" OR LESS

N.T.S. (WD1-02)

NOTE: AC PIPE CROSSINGS SUBSTITUTE BANK RUN SAND, IF NOT ENCASED, FOR SPEC. #78 STONE. ALL OTHER PIPE MATERIALS USE STONE.

NOTE: SAWED JOINTS TO BE A MINIMUM 1" DEPTH TO OBTAIN STRAIGHT JOINTS.

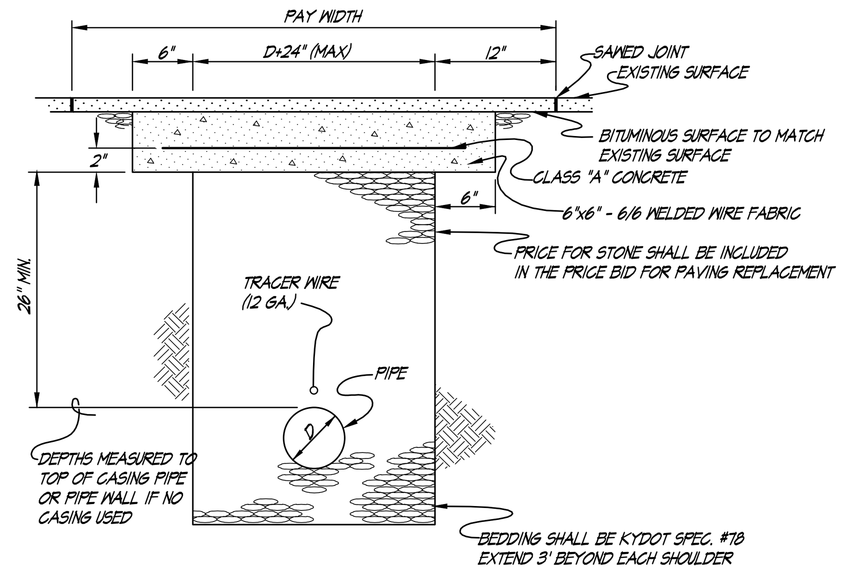

BITUMINOUS HEAVY-DUTY SURFACE MORE THAN 2"

N.T.S. (WD1-03)

NOTE: AC PIPE CROSSINGS SUBSTITUTE BANK RUN SAND, IF NOT ENCASED, FOR SPEC. #78 STONE. ALL OTHER PIPE MATERIALS USE STONE.

NOTE: EXISTING JOINTS OR BREAKS IN PAVEMENT TO BE USED FOR SAW JOINTS IF POSSIBLE. IF DISTANCE FROM SAWED JOINT TO NEAREST EXISTING JOINT IS LESS THAN 6' REMOVE PAVEMENT TO EXISTING JOINT & REPLACE SLAB.

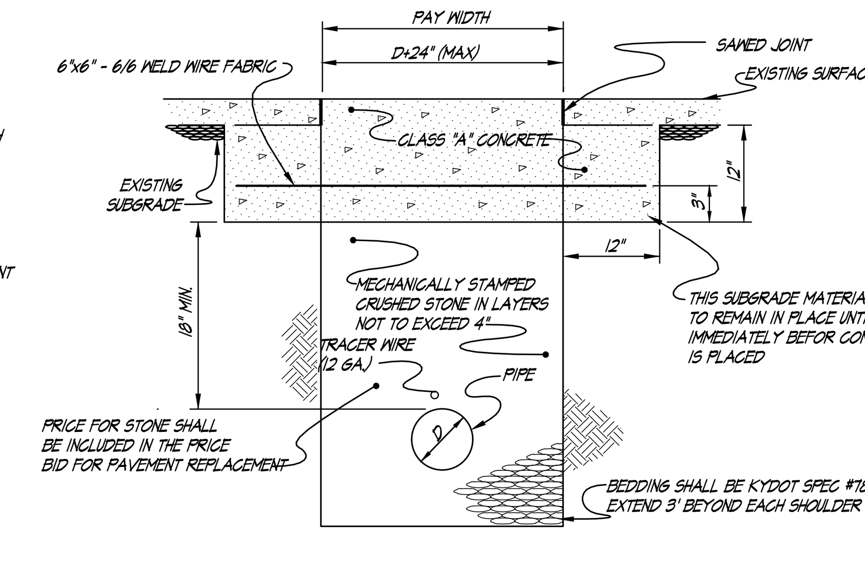

CONCRETE SURFACE

N.T.S. (WD1-04)

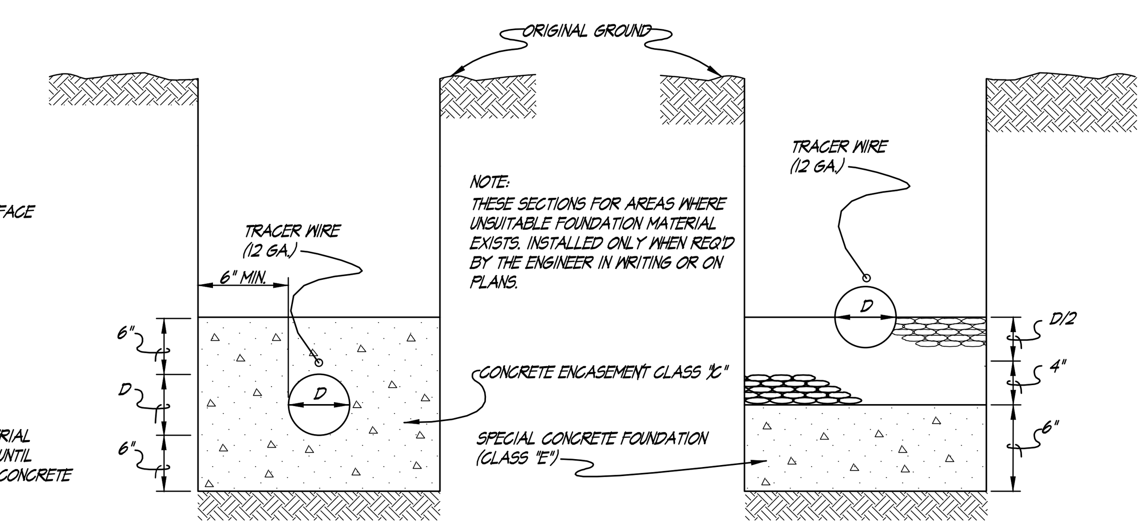

SPECIAL BEDDING FOR UNSTABLE FOUNDATIONS

(EXTRA PAY ITEM)

N.T.S. (WD1-07)

NOTE: AC PIPE CROSSINGS SUBSTITUTE BANK RUN SAND, IF NOT ENCASED, FOR SPEC. #78 STONE. ALL OTHER PIPE MATERIALS USE STONE.

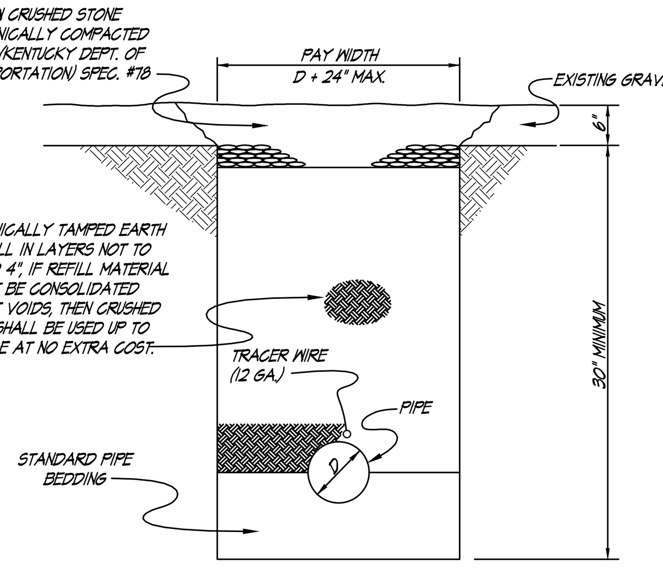

GRAVEL SURFACE

N.T.S. (WD1-01)

PIPE	BEDDING (REQ'D NO EXTRA PAYMENT)
PVC (4" AND SMALLER) COPPER, GALVANIZED	EARTH TRENCH BOTTOM (LEVELLED)
PVC (ABOVE 4"), ALL MUNICIPAL PVV	COMPACTED EARTH BACKFILL
C.I. AND D.I. (LESS THAN 4")	COMPACTED EARTH BACKFILL
C.I. AND D.I. (4" DIA. AND ABOVE)	COMPACTED CRUSHED STONE BACKFILL
ASBESTOS-CEMENT (ABOVE 4")	COMPACTED BANK RUN SAND

STANDARD BEDDING TABLE

(WD1-06)

NOTE: FOR BOTH OPPOSITE SIDE & SAME SIDE SERVICES IN HIGH PRESSURE AREA WHERE MAINLINE PIPE EXCEEDS CLASS 160, THE SERVICE LINE SHALL BE CONSTRUCTED OF PIPE OF THE SAME CLASS AS THE MAINLINE FROM THE MAINLINE TAP TO THE PRESSURE REGULATOR.

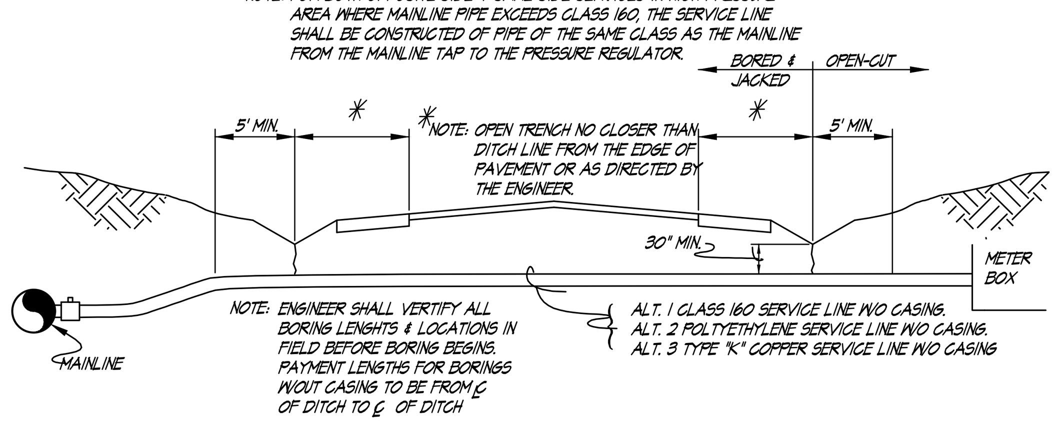

OPPOSITE SIDE SERVICE

N.T.S. (WD4-03)

NOTE: BOXES IN GRASS AREAS SHALL BE NO HIGHER THAN 1/2" ABOVE GROUNG & NO LONGER THAN FLUSH. BOXES IN CONCRETE OR PAVED AREAS SHALL BE FLUSH. IN AREAS TO BE SODDED, THE TOP OF BOX SHALL BE 2" ABOVE GRADE.

*NOTE: CHECK VALVES TO BE INSTALLED IN METER BOX WITH A SUITABLE METER BOX COVER TO ACCOMODATE VALVE & ACCESSORIES.

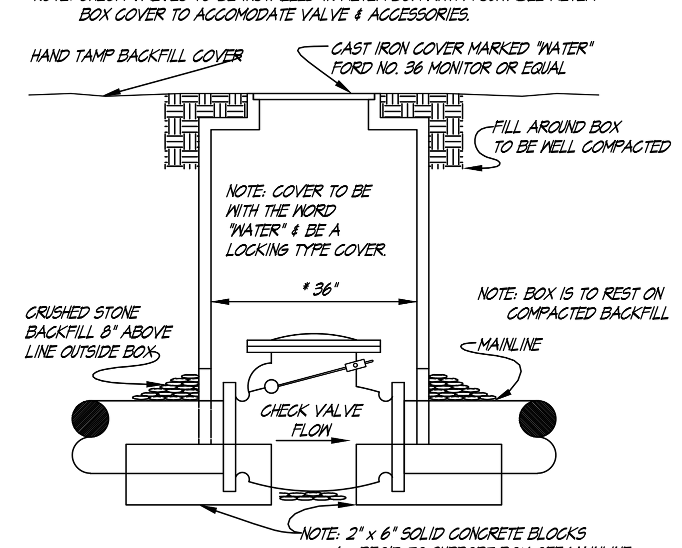

CHECK VALVE SETTING

N.T.S. (WD4-07)

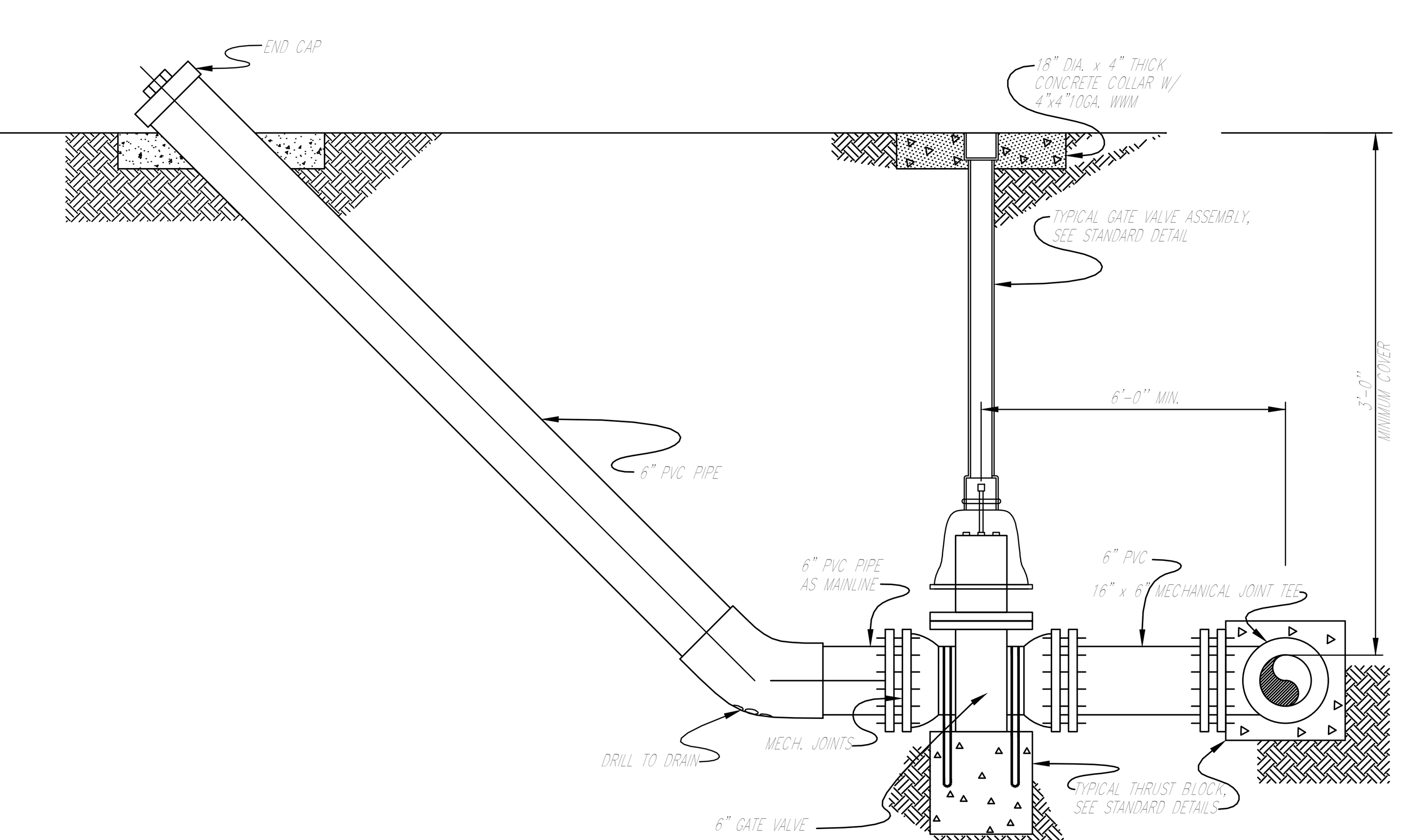

TYPE "C" BLOW-OFF/FLUSH HYDRANT

N.T.S. (WD4-05A)

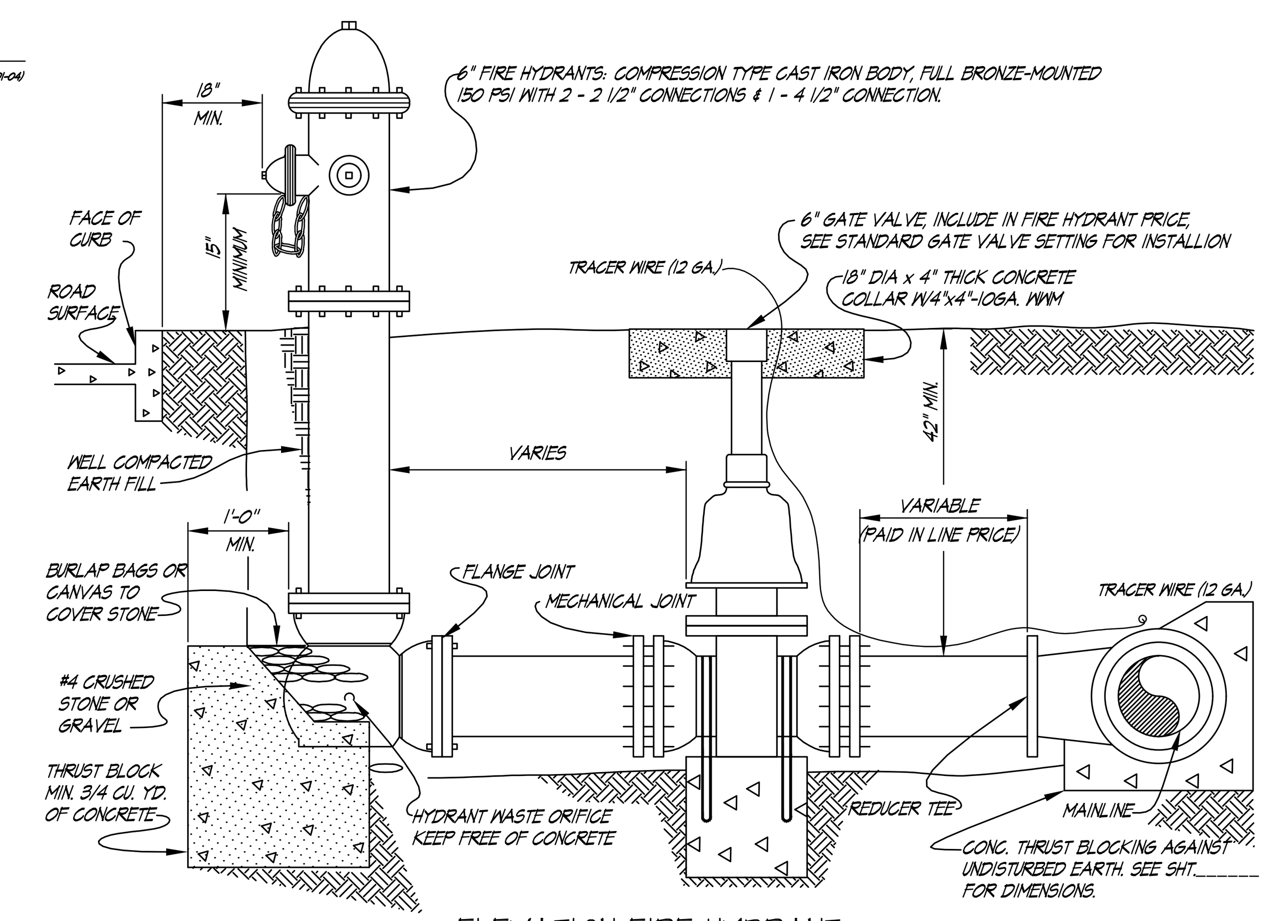

ELEVATION FIRE HYDRANT

N.T.S. (WD4-06)

NOTE: METER BOXES SHALL BE A MIN. OF 36" DEEP & 15" ⅜ & SHALL BE EITHER CAST IRON,CONCRETE, CONCRETE PIPE, OR VITRIFIED CLAY PIPE. THE COVERS FOR 15" ⅜ PIPE SHALL BE CAST IRON 11 1/2" ⅜ & 4" DEEP, STAMPED WITH THE WORD "WATER METER" FORD. NO. 31 OR EQUAL.

BOXES IN GRASS AREAS SHALL BE NO HIGHER THAN 1/2" ABOVE GROUND & NO LOWER THAN FLUSH. BOXES IN CONCRETE OR PAVED AREAS SHALL BE FLUSH. IN AREAS TO BE SODDED, THE TOP OF THE BOXES SHALL BE 2" ABOVE GRADE.

*NOTE: 2' MAX OUTLET PIPE UNLESS APPROVED BY ENGINEER OR ON PLANS.
ALL INLET SERVICE LINE OVER 4" OS ADDITIONAL PAY ITEM FOR SAME SIDE SETTINGS.

SERVICE LINE CONNECTIOS ARE TO BE MADE W/COMPRESSION FITTINGS ONLY.

SERVICE CLAMPS TO BE MUELLER BRONZE SERVICE CLAMPS FOR PLASTIC PIPE W/SILICON BRONZE TIGHTING SCREWS OR APPROVED EQUAL.

METERS LARGER THAN 2" SHALL BE COMPOUND METERS

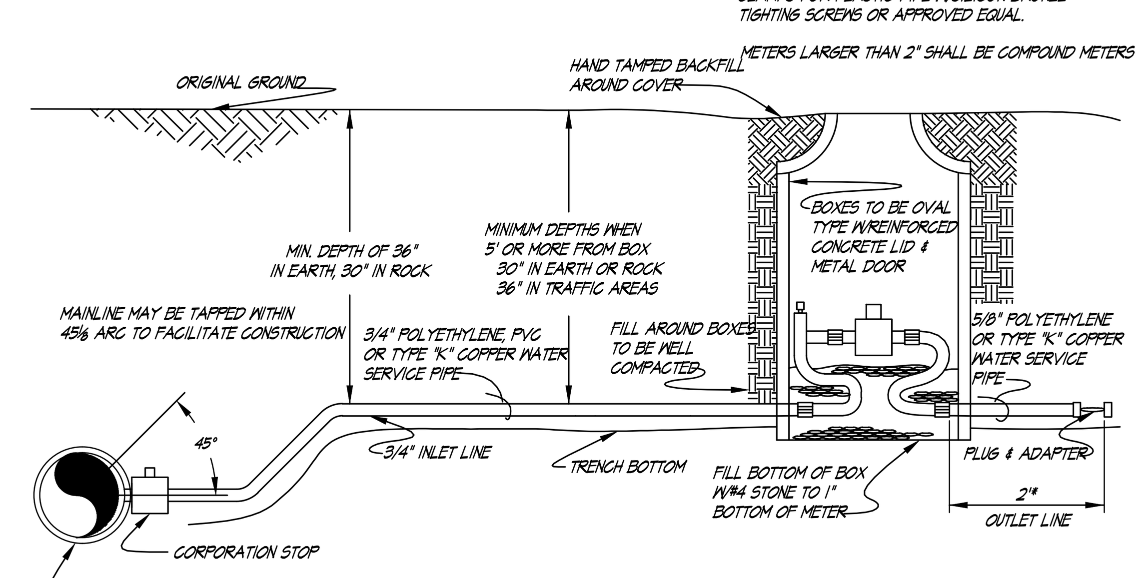

STANDARD METER SETTING

N.T.S. (WD4-01)

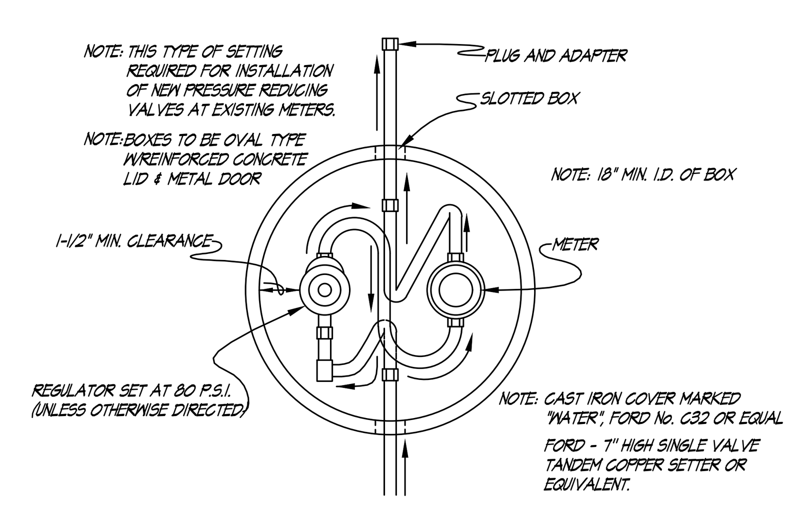

PLAN VIEW OF TANDEM COPPER SETTER WITH PRESSURE REGULATOR ON INLET SIDE OF METER

N.T.S. (WD4-02)

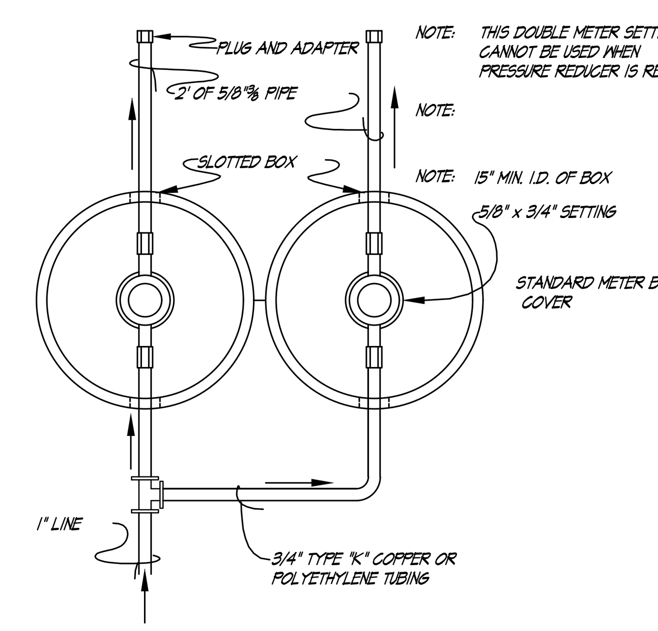

OPTIONAL DOUBLE METER SETTING

N.T.S. (WD4-02A)

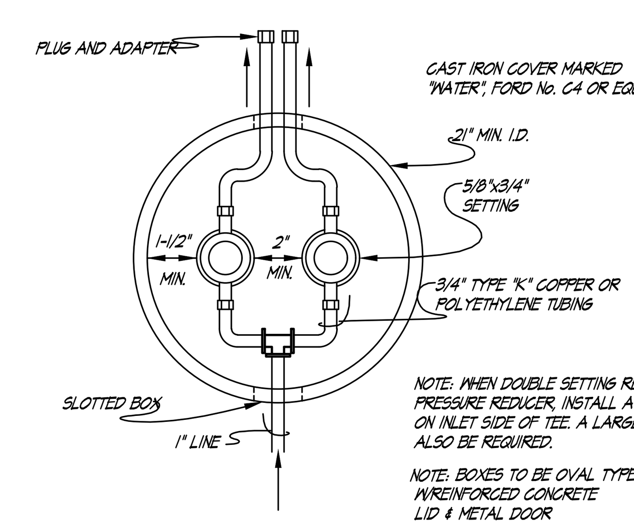

DOUBLE METER SETTING

N.T.S. (WD4-02B)

NOTE: WHERE THE WATERMAIN IS LOCATED IN A STREET OR ROAD, THE AIR RELEASE VALVE AND BOX ARE TO BE LOCATED OFF THE ROAD AS DIRECTED BY THE ENGINEER AND CONNECTED TO THE MAINLINE BY 3/4" SERVICE PIPE. THE SERVICE PIPE WILL BE A SEPERATE PAY ITEM.

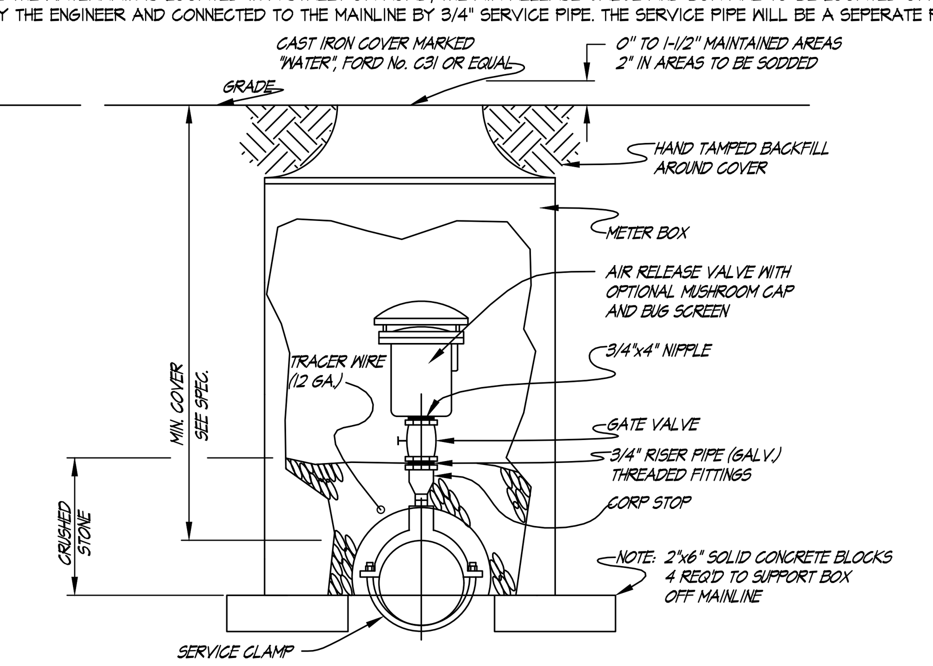

AIR RELEASE VALVES

N.T.S. (WD4-04)

STANDARD WATER DETAILS

WATER, SEWER AND ACCESS ROAD EXTENSIONS
GRACE CLINIC PROJECT
SOUTHEAST KENTUCKY INDUSTRIAL DEVELOPMENT AUTHORITY
KNOX COUNTY, KENTUCKY

DATE	REVISION	BY

© COPYRIGHT
NOTICE: This document discloses subject matter considered confidential by Mayes, Sudderth & Etheredge, Inc. and on which Mayes, Sudderth & Etheredge, Inc. has property rights. Neither receipt nor possession thereof confers or transfers any rights to reproduce the document or any part thereof, or to disclose any information contained therein to others, or to use it for any purpose without the written permission of Mayes, Sudderth & Etheredge, Inc.

PROJECT NO.	2063-65
DESIGNED BY	D.S.T.
DRAWN BY	G.M.S.
CHECKED BY	D.S.T.
REVIEWED BY	D.S.T.
DATE	AUGUST 2016
SCALE	AS NOTED

MSE OF KENTUCKY, INC.
Engineers Architects Planners
624 Wellington Way
Lexington, KY 40503
www.mselex.com
Phone: (859)223-5694
Fax: (859)223-2607

DRAWING NO.
WD1
SHEET OF